Fire-Rated Door

Installation Guide

Overview

This document details the installation method to be used by door installers when installing Pyropanel fire doors.

Standards Certification

Installation and Certification of Fire Resistant Doorsets to **Australian Standard 1905.1: 2015.** All fire door installations must comply with all relevant sections of the aforementioned standard, in particular; Clearances Around Door Leaves; to enable certification. All companies and individuals engaged in fire door installation, should ensure they are familiar with, and their installation complies with, the requirement of this standard.

What You Need

The Doorset
Spirit Level
Spacer
Fixings
Chisel
Sander
Measuring Device
Pencil

Door Frame Installation

The Australian Standard applies to a fire-resistant doorset which includes the door frame. Compliance of the complete doorset is contingent on the frame installation as an important measure in building a fire-resistant barrier.

1 Backfilling

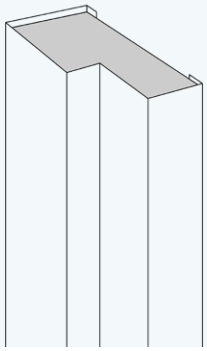

Frame must be backfilled to meet AS1530.4 requirements regarding insulation. Backfilling options include Pyropanel M4 mortar or standard mortar, Pyropanel FR board, Plasterboard strips, cornice adhesive / plaster with or without plasterboard.

2 Approved System

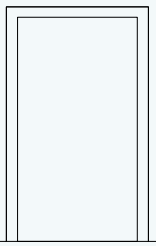

Frame must be installed into an approved fire-rated wall system. Ensure wall system and doorset are tested and certified together. Ensure frame / fixings are installed according to specifications or as per installation guide if sourced from another supplier.

3 Check Level

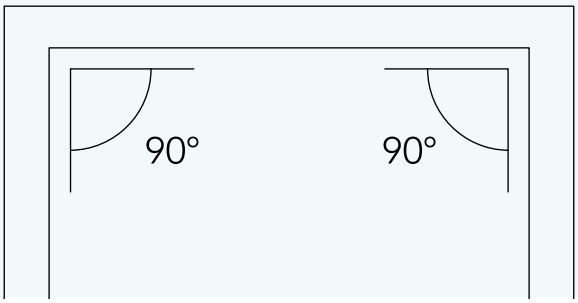

Frame jambs must be installed plumb and parallel. Measure and visually verify frame header and stiles are level from one edge of door frame through to opposite edge, and from top to bottom.

Door Installation Preparation

1 Compliant Hardware

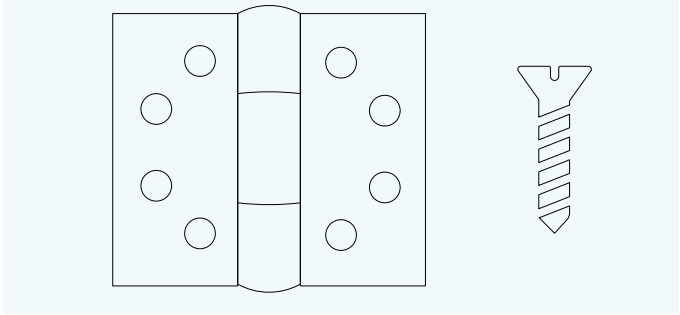

Check that all hardware and fixings are on-hand and compliant.

2 Check Door Schedule

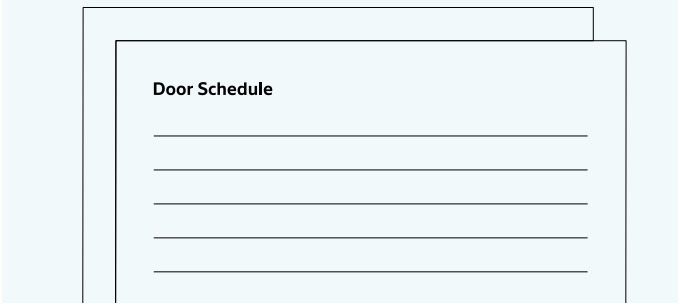

Ensure latest revision of door schedule is being used and door is correct for opening.

3 Measure Reveal

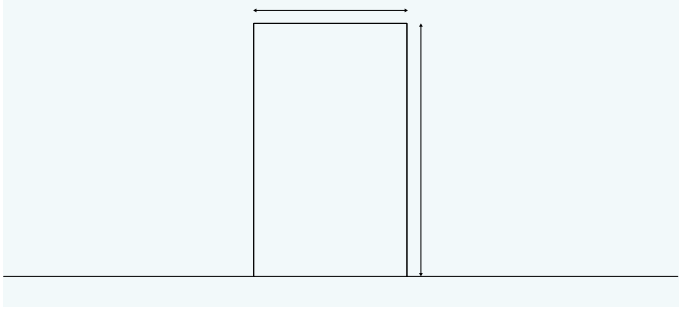

Measure reveal height and width to check if the doors will fit into the opening.

4 Check Frame Installation

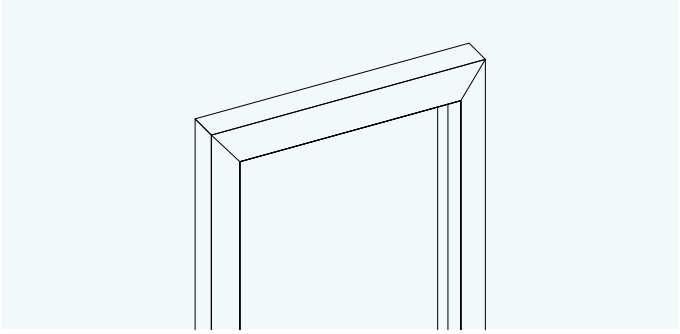

Check frame is installed correctly and its installation is compliant.

5 Check Hinges

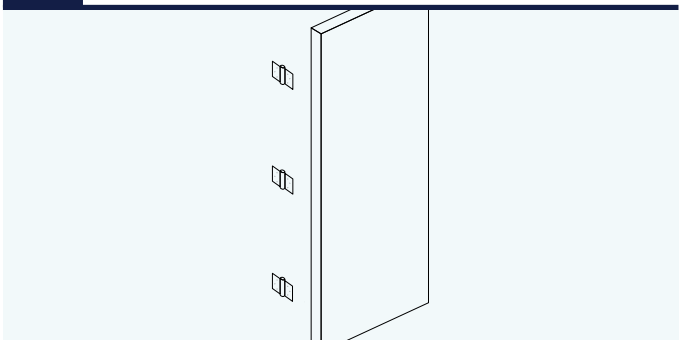

Check hinges are well secured and there is sufficient quantity.

Door Leaf Installation

1 Mark Doors

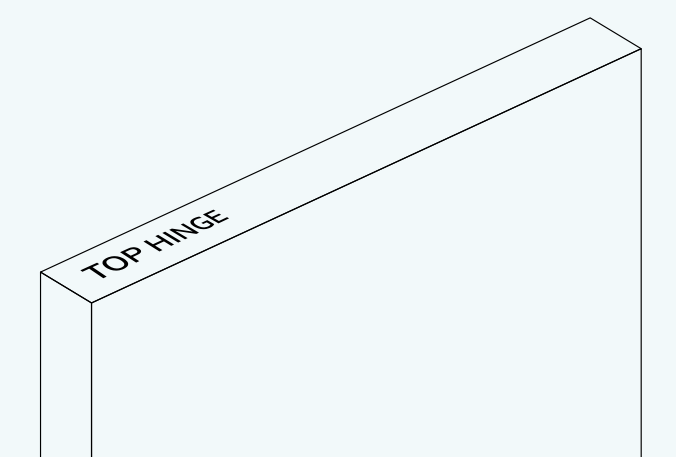

The Door Manufacturer's marking identifies the hinge and lock side. Mark 'top hinge corner' on top face hinge side. Can also confirm by using a magnet to locate the steelreinforcments for hinges and closer. This only applies to 2-Hour Fire Doors.

2 Open Hinges

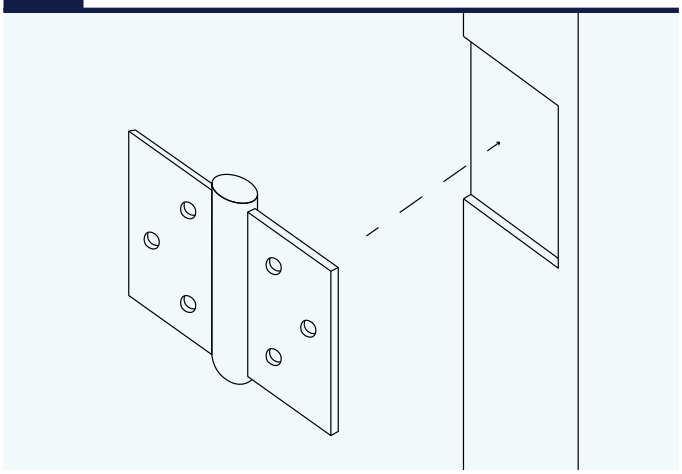

Open hinges then place door leaf in frame.

3 Scribe Door

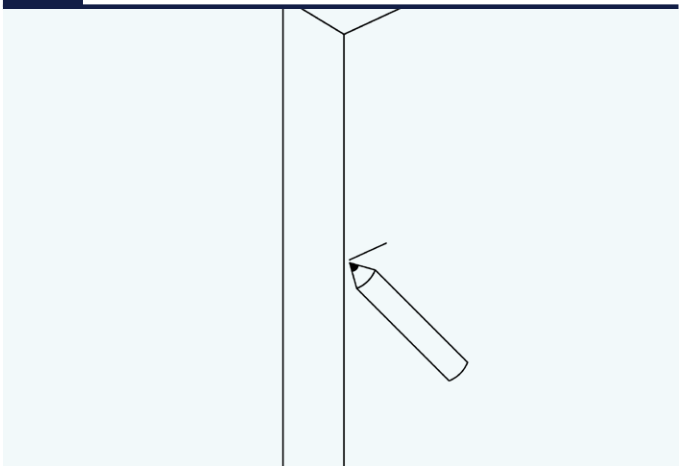

Scribe door with a 2.5mm spacer.

4 Machine Door

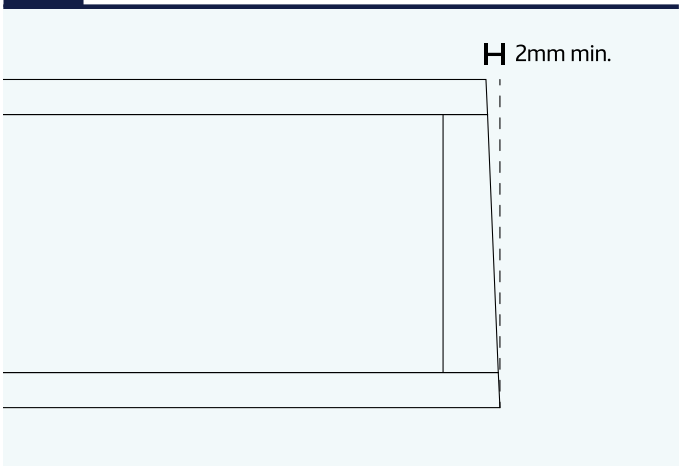

Machine door to scribed marks and finish by planing a minimum 2mm splay or 'back edge'. Back edge will ensure closing door edge does not bind on the door frame.

Door Leaf Installation

5 Cut Check Out

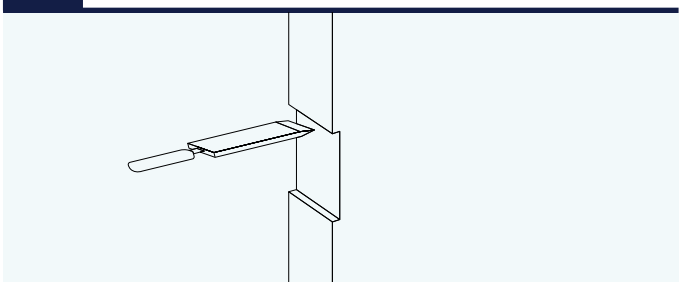

Use sharp chisel or trimmer to cut check out for door hinges. Remove hinges from frame and drill 4mm pilot hole / screw them onto door as per Pyropanel approved fixings:

Hinges	10 gauge x 50mm zinc plated steel or stainless steel CSK self tapping screws. (Minimum)
Door Closer	10 gauge zinc plated steel or stainless steel pan head self tapping screws.

6 Plane Lock Side

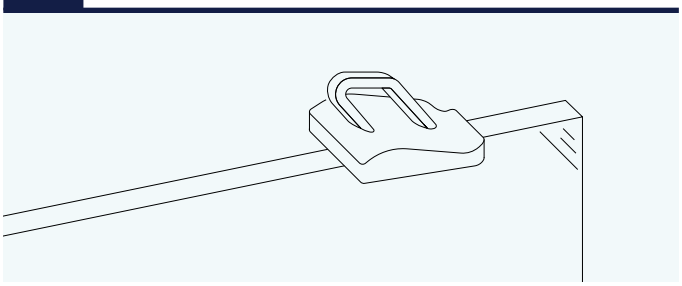

Turn door end-on-end and plane lock side. The lock side will require a 2mm splay or 'Back edge'.

7 Sanding & Painting

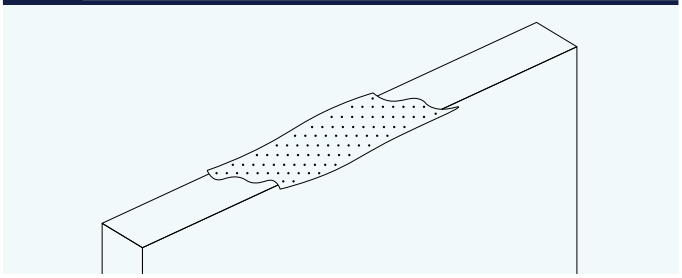

Sand edges and paint top and bottom of door.

8 Hang Door

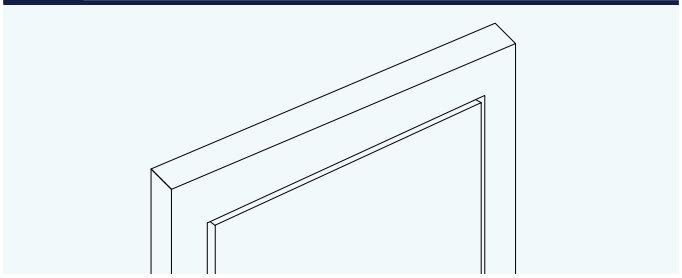

Hang door onto door frame and check door swing.

9 Fit Hardware

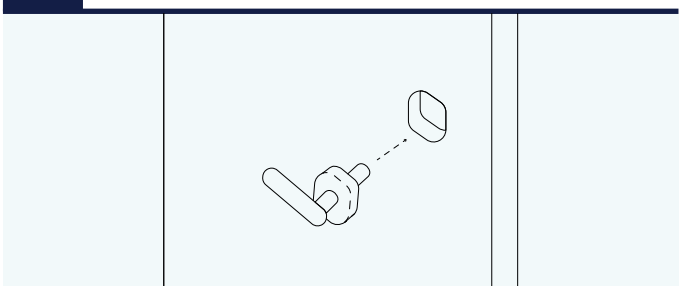

Fit nominated door hardware as per manufacturers installation instructions.

10 Check Clearances

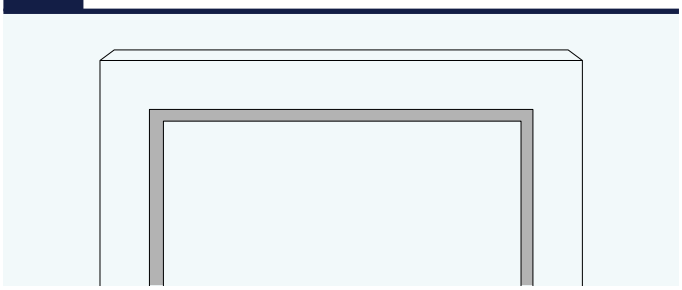

Ensure installation clearances are compliant as per AS1905.1 (see page 9).

Door Leaf Installation | Additional Steps for Pair Doors

11 Repeat Process

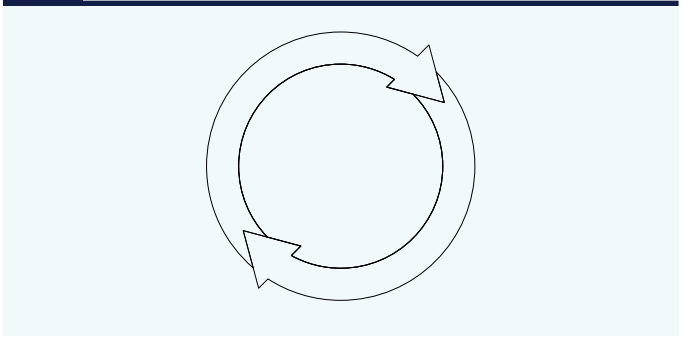

Repeat process for second leaf ensuring correct gap for meeting stile.

12 Fit Hardware

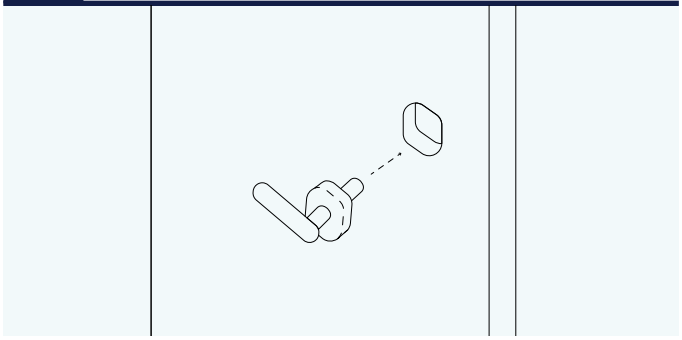

Fit nominated door hardware as per the manufacturers installation instructions.

13 Check Intumescent Seals

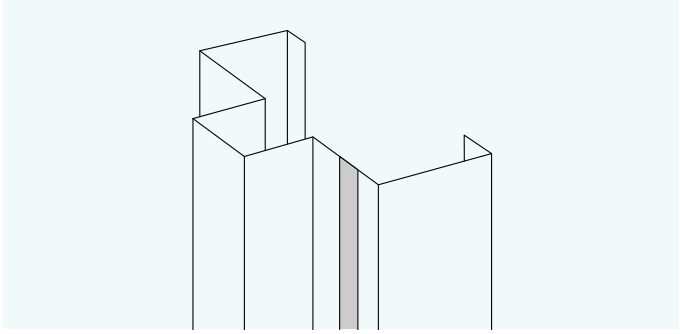

Ensure intumescent seals are secured into groove within aluminium meeting stiles.

14 Fit Meeting Stiles

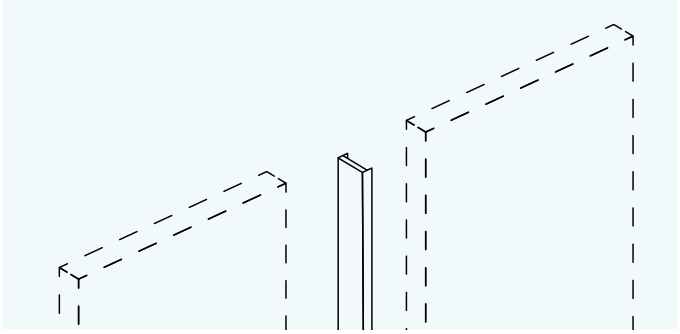

Fit aluminium meeting stiles with 10 gauge self-drilling screws.

15 Fit Smoke Seals (if applicable)

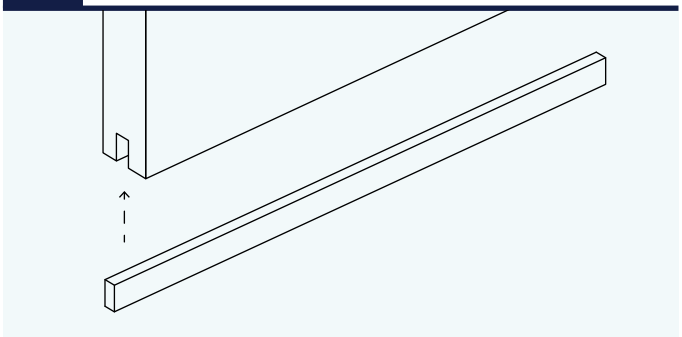

Where required, insert and secure smoke seals to each door leaf meeting stile.

Door Trimming

Trimming Door Leaf to Suit Frames

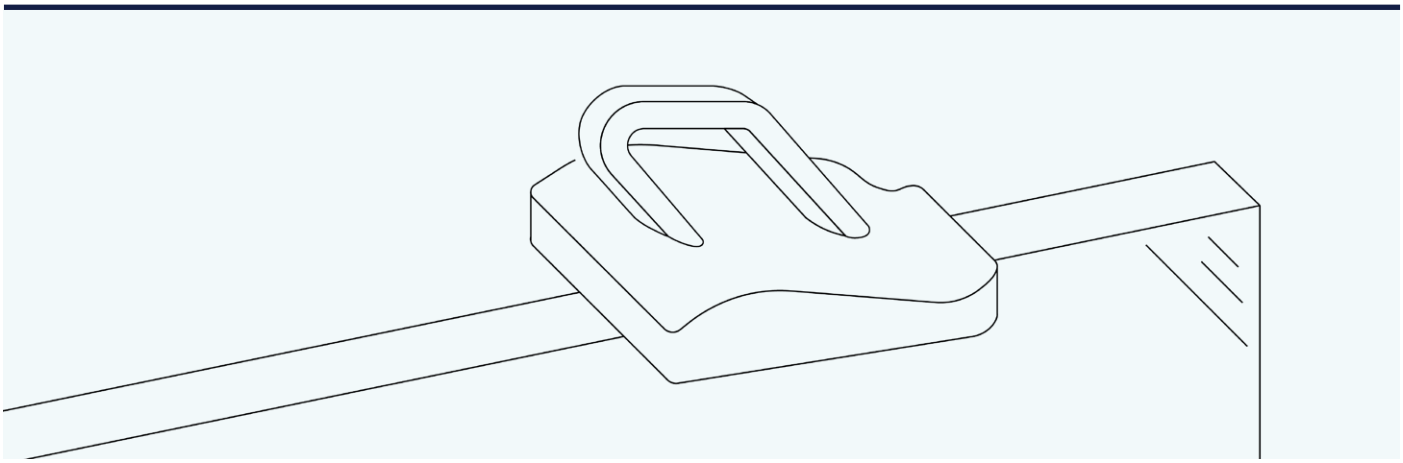

Stiles & rails in fire doors are generally max. 10mm thick. Their function is to accommodate an acceptable finish to the door's edges permitting hardware to be installed securely and enable trimming. Where intumescent strips are fitted, this is a design requirement not to be removed or modified. Where door trimming or planing is necessary to fit into frame, ensure equal are removed from each side. DO NOT trim or plane one side only. Excessive trimming or planing from one side only will reduce strength of door and possibly expose core material and intrumesent strips. This may affect serviceability of door and render it non-compliant. A custom door is required if trimming is to a depth where the door stiles and rails are not serviceable.

1-Hour Fire Door Hinge Installation

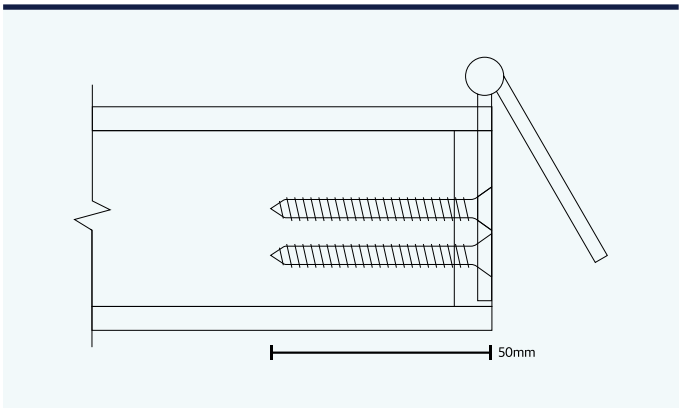

- Hinge screws must be 10g x min. 50mm
- Pre-drill hinge fixing screws 4mm to a depth of 50mm (or to suit screw length).
- A minimum of 3 hinges is required for a fire doorset. Spence Doors recommends a minimum of 1 door hinge per 18kgs of door weight. A standard door with 4mm MDF faces weighs approx. 22kgs per square metre. Additional hinges should be positioned at top of leaf eg. 2 hinges at top for a 4 hinge set.

2-Hour Fire Door Hinge Installation

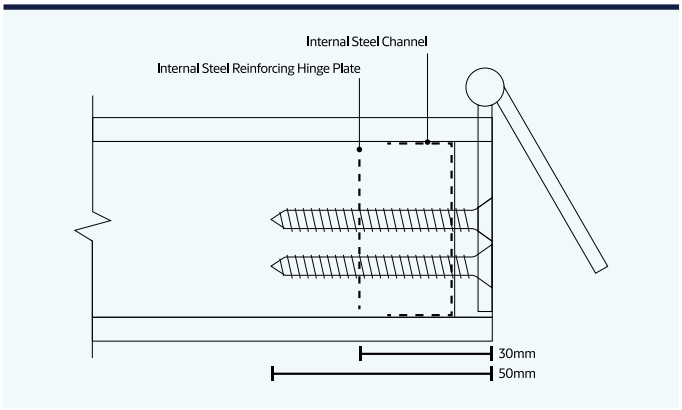

- Hinge screws must be 10g x min. 50mm
- Pre-drill hinge fixing screws 4mm to a depth of 50mm (or to suit screw length).
- A minimum of 3 hinges is required for a fire doorset. Spence Doors recommends a minimum of 1 door hinge per 20kgs of door weight. A standard door with 4mm MDF faces weighs approx. 22kgs per square metre. Additional hinges should be positioned at top of leaf eg. 2 hinges at top for a 4 hinge set.

Perimeter Clearances

Threshold and Floor Finish

Clearances between the bottom of all door leaves and the floor shall be as follows:

a. 3mm - 10mm between door leaf and top surface of floor / floor covering.

b. ≤ 25mm between door leaf and top of non-combustible threshold.

Note
When doorset is inspected for compliance with Item (b), clearance cannot exceed 25mm for certificationpurpose unless a note with details on clearances is made in evidence of compliance.

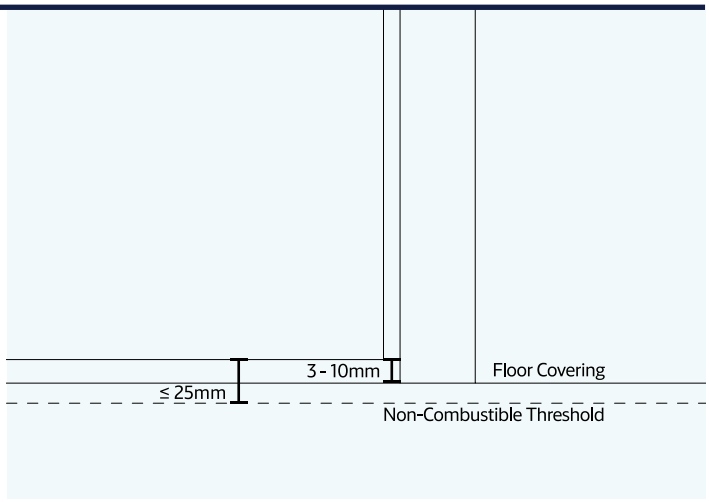

Door Leaf to Frame (on Side-Hung Door)

Door leaves side-hung into rebated frames must swing clear of door frame and have mean clearances, in the closed position, between the leaf and the head and between the leaf and each stile, of no more than 3mm.

Note
Measurements should be taken at intervals no less than 750mm apart, and a minimum of three measurements to each vertical edge of the leaf and two measurements on horizontal edge.

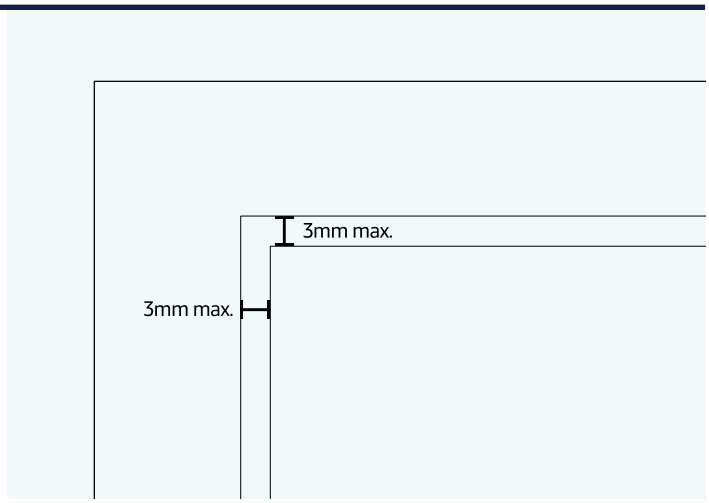

Door Leaf to Door Stop (on Side-Hung Door)

Door leaves side-hung into rebated frames must swing clear of door frame and have mean clearances, in the closed position, between the face of the leaf and the doorstop ≤ 3mm, and max. 5mm at any location.

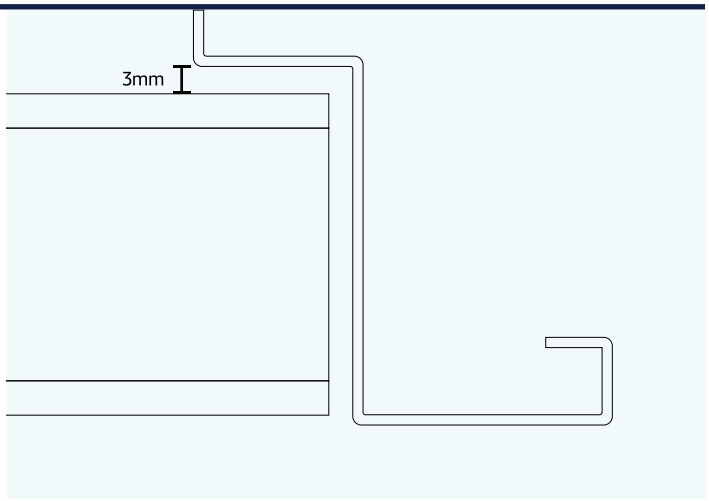

Non-Combustible Threshold | Door Underside

1 Ensure Flat Surface

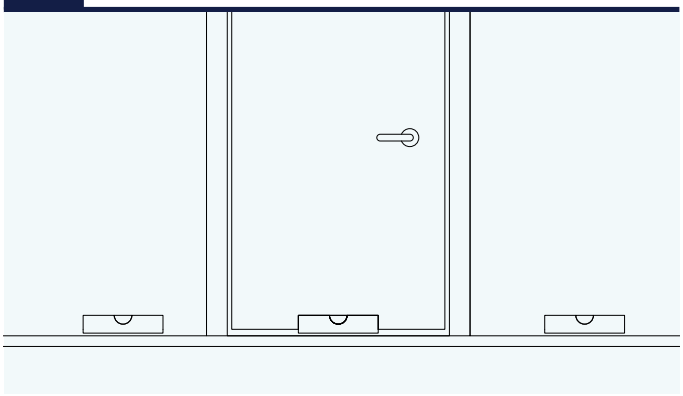

The floor or floor covering must be sufficiently flat / level. This makes for a consistent clearance between bottom of door leaf and floor / floor covering all along opening width.

2 Rectify Floor Inconsistencies

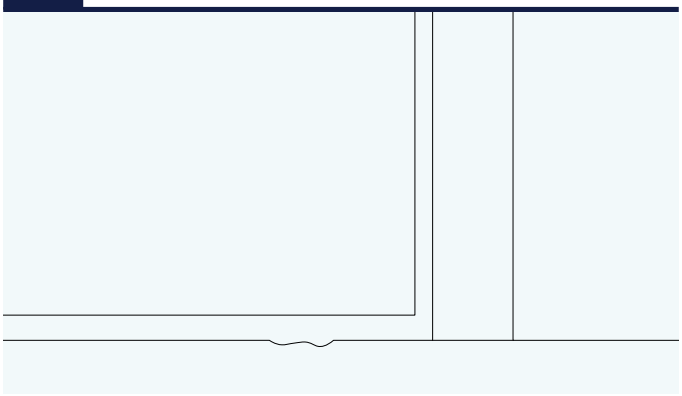

Level floor to enable compliance. Excessive hollows or bumps in the floor can compromise compliance. This may require filling hollows in floor and/or rectifying bumps in floor.

3 Check Clearances

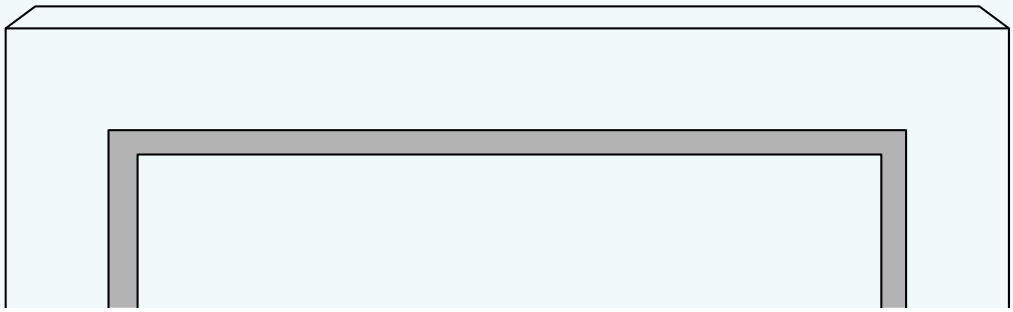

Measure clearances between bottom of door leaf. Must meet the following details:
a. 3mm - 10mm between door leaf and top surface of floor / floor covering.
b. ≤ 25mm between door leaf and top of non-combustible threshold.

Note
When the doorset is inspected for compliance with Item (b), clearance cannot exceed 25mm for purpose of certification unless a note providing information on clearances is made in evidence of compliance.

Non-Combustible Threshold | Swing Zone

1 Check for Unhindered Swing

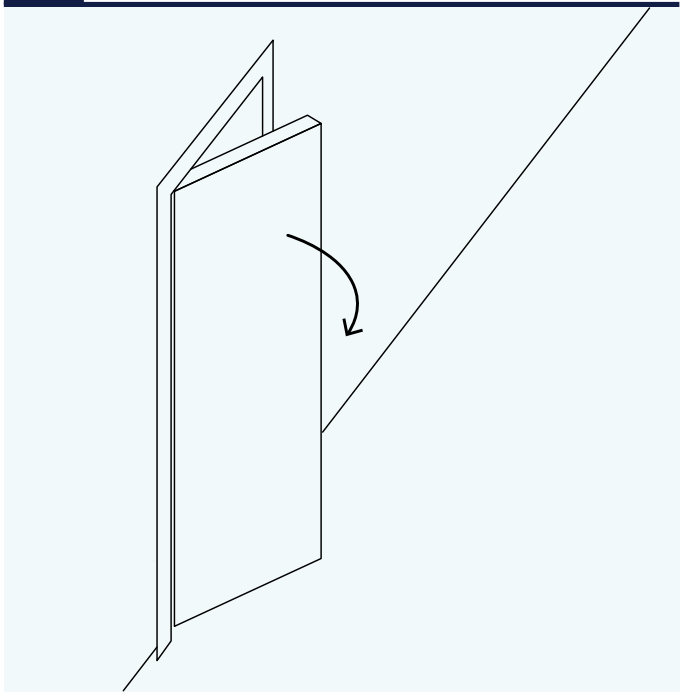

Floor surface / floor covering must be sufficiently level so when a fire-resistant doorset is in operation it can operate unhindered without binding on any part of floor within door swing zone.

To verify this;
- Check for any bump or rise in the floor
- Check for any slope in the floor
- Uneven floors should be rectified by the trade responsible

2 Determine Options Before Trimming

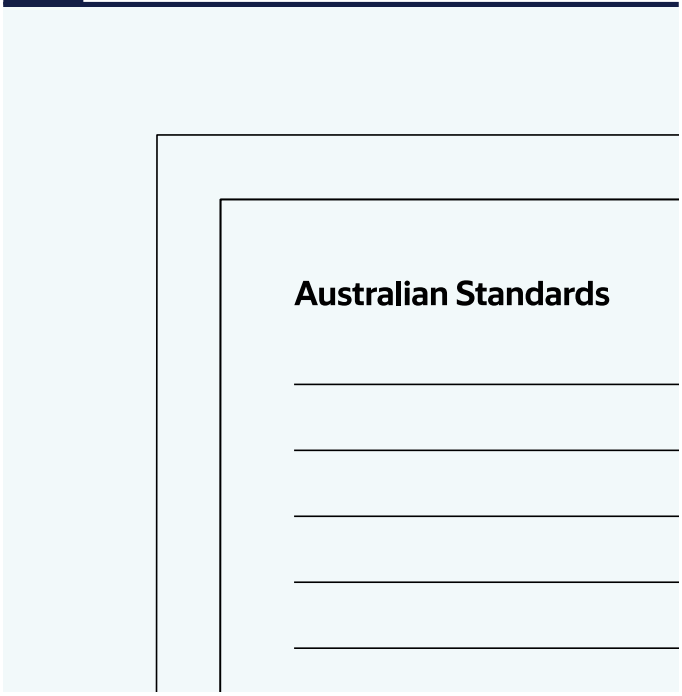

Refer to Australian Standards or advice from Spence team in rectifying any incompliant clearances or hinderances to swing zone. Whilst trimming door's underside is an option, it is a non-reversible alteration that risks non-compliance if not completely correctly.

Holding a Fire Door Open

Sandbags NOT wedges

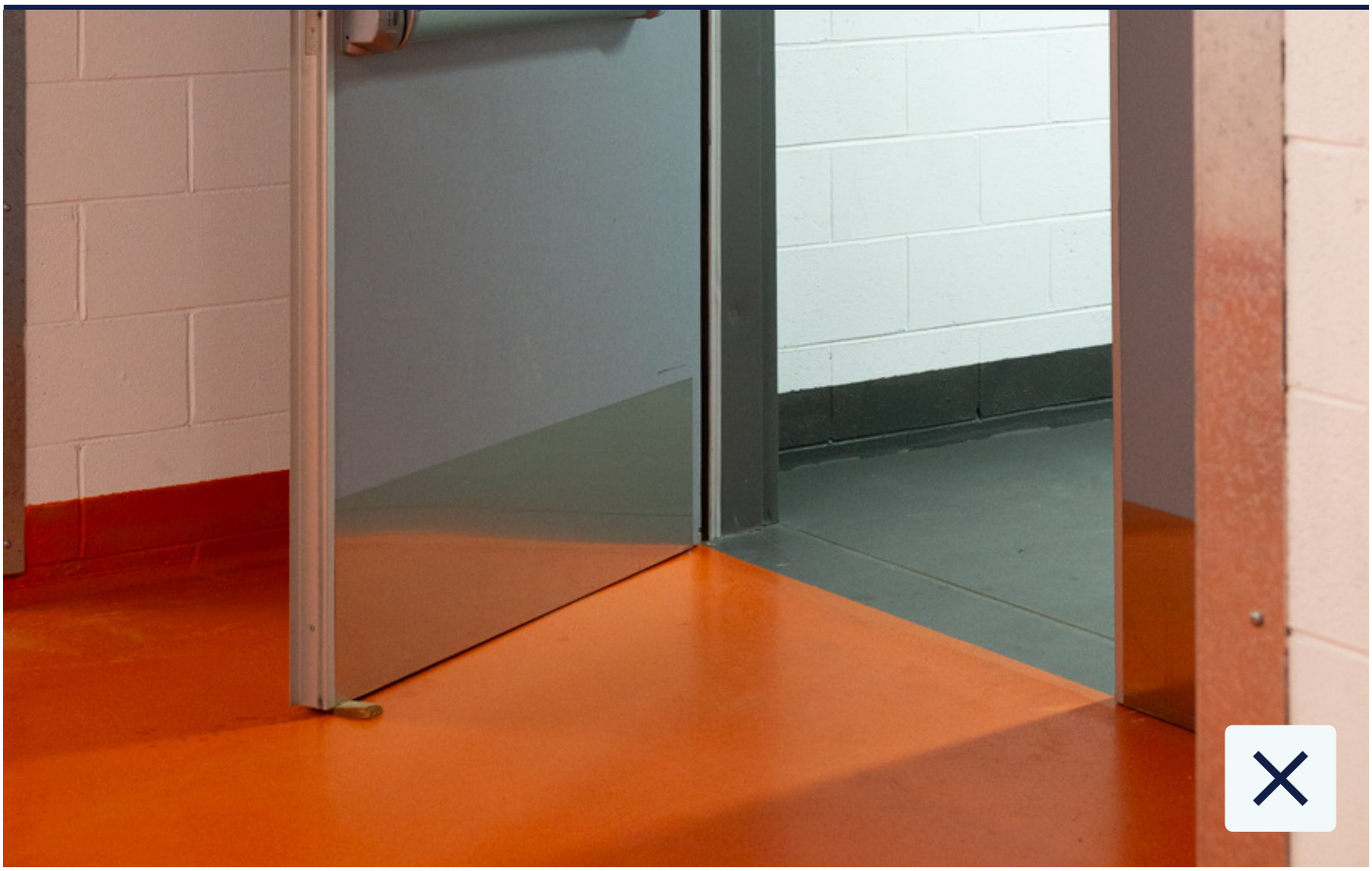

If an open door position is desired, use sand bags to hold open the door rather than a wedge. Holding a fire door open with a wedge creates an unbalanced pressure against the door leaf as the Door Closer attempts to pull the door into a closed position. This presents a risk of warping or bowing - ensure this risk is communicated with all trades overseeing the doorset's installation. This damage oftentimes cannot be rectified and the door will need replacement. As per Spence Doors' Warranty, cost of replacement falls on the customer in this instance.

Fire Door Inspection & Certification

The purpose of the fire doors certification/Inspection is to ensure the installation of the frames and doors meet the requirements of the Australian standards. Once the inspection is completed fire tags can be issued by Spence doors for the fire rated doors and frames along with certification documentation.

In states outside of Queensland the builder will be issued an installation checklist to confirm installation compliance. In Queensland a certified inspector will inspect the installation. The certifier is not responsible for snagging or rectification of defects, this is the responsibility of the builder to complete prior to the certifier arriving.

It is the responsibility of the certifier to:

1. Inspect the doors set for compliance to the Australian standards AS19.05.1
2. Complete an installation compliance sheet.
3. Complete a schedule of evidence noting any non-conformances which is to be provided to the builder for rectification.
4. Re-inspect non-compliant items once rectified (at client expense).
5. Complete form 16 and door certification & issue to the client with the schedule of evidence.